WITHOUT SOLDER WIRE PERFORATION

GSFR XX D LL-B

Guide kit Ref.	Guide tube Ref.
GSFR**05**X**03**-B	*0029667*
GSFR**05**X**07**-B	*0029668*
GSFR**05**X**10**-B	*0029669*
GSFR**06**X**03**-B	*0029670*
GSFR**07**X**03**-B	*0029671*
GSFR**08**X**03**-B	0029648
GSFR**08**X**05**-B	0029649
GSFR**08**X**06**-B	0029650
GSFR**08**X**07**-B	0029651
GSFR**08**X**10**-B	0029652
GSFR**10**X**03**-B	0029653
GSFR**10**X**06**-B	0029654
GSFR**10**X**07**-B	0029655
GSFR**10**X**10**-B	0029656
GSFR**12**X**03**-B	0029657
*GSFR**12**X**05**-B*	0030647
GSFR**12**X**10**-B	0029658
GSFR**15**X**03**-B	0029659
GSFR**15**X**04**-B	0029660
GSFR**15**X**05**-B	0029661
GSFR**15**X**10**-B	0029662
GSFR**15**X**15**-B	0029663
GSFR**16**X**03**-B	0029664
GSFR**16**X**04**-B	0029665
*GSFR**16**X**15**-B*	0029666

Wire diameter		
XX	Range of use	
04	Ø0.38 - 0.40 mm	Ø0.015 - 0.016 in
05	Ø0.46 - 0.56 mm	Ø0.018 - 0.022 in
06	Ø0.60 - 0.64 mm	Ø0.023 - 0.025 in
07	Ø0.70 - 0.78 mm	Ø0.028 - 0.031 in
08	Ø0.80 - 0.82 mm	Ø0.032 - 0.033 in
10	Ø0.90 - 1.10 mm	Ø0.036 - 0.044 in
12	Ø1.14 - 1.27 mm	Ø0.045 - 0.051 in
15	Ø1.50 - 1.57 mm	Ø0.060 - 0.063 in
16	Ø1.60 - 1.63 mm	Ø0.063 - 0.065 in

Tube lenght		
LL	Lenght	
03	0.3 m	11.81 in
04	0.4 m	15.75 in
05	0.5 m	19.68 in
06	0,6 m	23,62 in
07	0.7 m	27.92 in
10	1.0 m	39.37 in
15	1.5 m	59.05 in

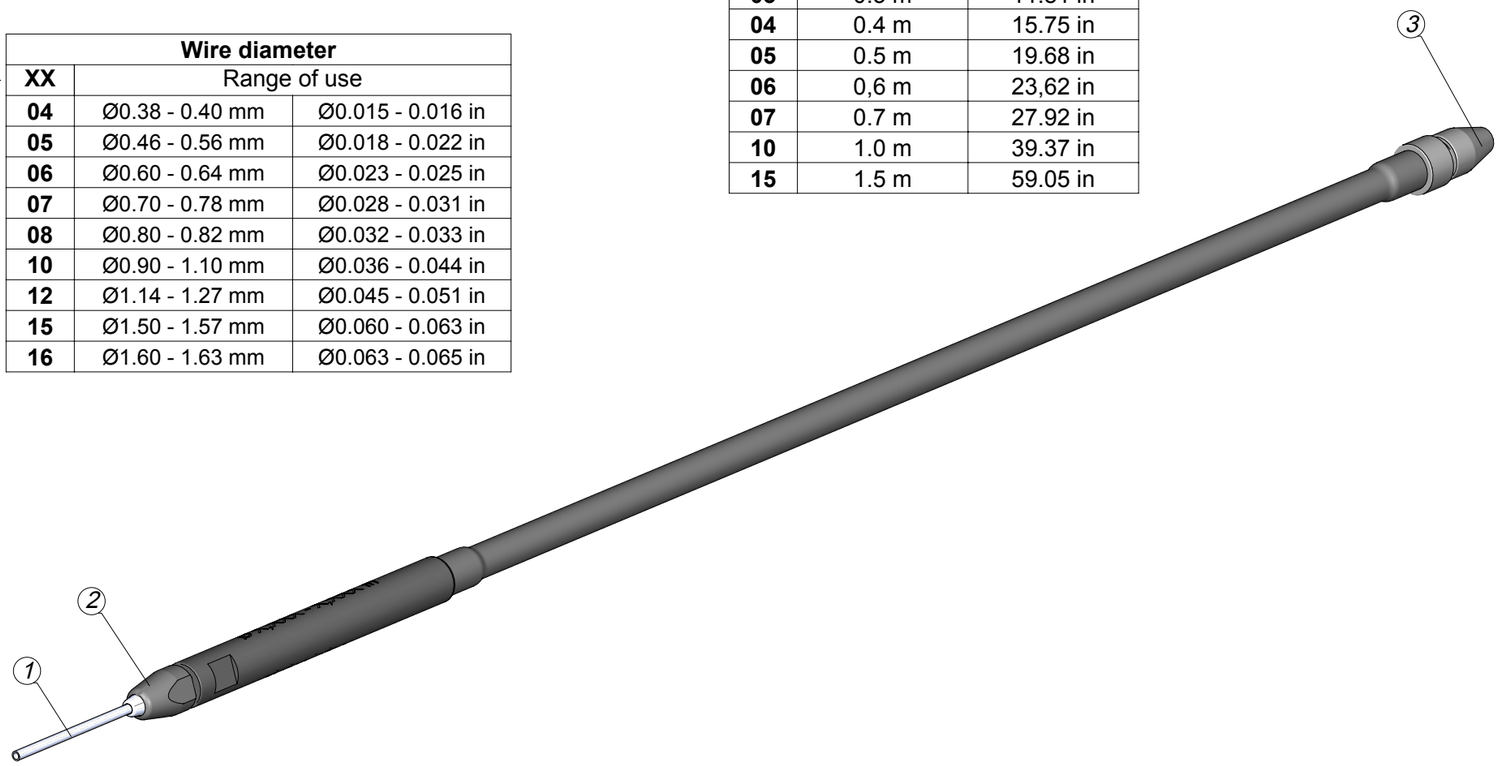

	Traction wheel Ref.	*Support wheel Ref.*	Inlet nozzle Ref. *(for SFR-A)*	*Interm. nozzle Ref.*	*Inlet nozzle Ref. (for SFR-B)*	*Counter wheel Ref.*	*Screws Ref.*	*Threaded stud Ref.*	*Needle*	*Metal cap*	*Input tube guide*
Tube lenght / *Wire∅*	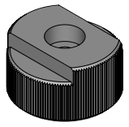	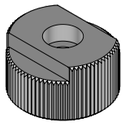							1 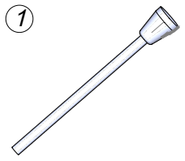	2	3
GSFR04DLL-B	**0019479**	**0020345**	-	**0030558**	***0030535***	***0026693 (Provided with SFR)***	***0026695 (x2)***	***0026696 (x3)***	**0029940**	**0029948**	**0029949**
GSFR05DLL-B		**0019519**									
GSFR06DLL-B				**0030559**	***0030534***				**0029941**		
GSFR07DLL-B		**0019480**		**0030560**	***0030536***				**0029942**		**0029950**
GSFR08DLL-B			**0023740**	**0030561**	***0030537***				**0029943**		
GSFR10DLL-B			**0023741**	**0030562**	***0030538***				**0029944**		
GSFR12DLL-B		**0019481**	**0023736**	**0030563**	***0030539***	***0026694***			**0029945**		**0029951**
GSFR15DLL-B			**0023855**	**0030564**	***0030540***				**0029946**		
GSFR16DLL-B			-	**0030565**	***0030541***				**0029947**		